APPLICATION OF NEG ARG FIBRE

Ref. No. 018 MARCH 1998

Nippon Electric Glass

NEG ARG Fibre, manufactured by Nippon Electric Glass Co., Ltd., is used throughout the world as a reinforcement for cement composites, including asbestos replacement products.

GFRC Products for Electrical Utilities

● SIZES, DETAILS AND SPECIFICATIONS

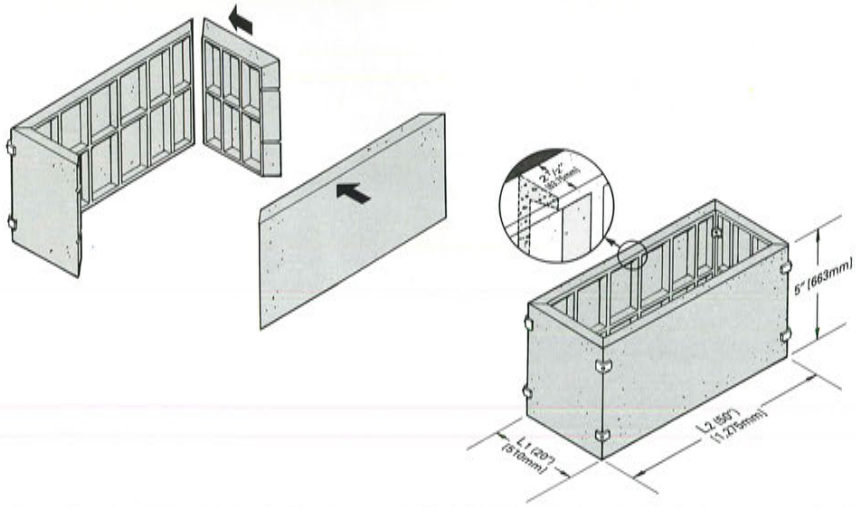

Modular Bases

One of the products offered by Concast is for the base support of transformers and switch gear enclosures is the Modular Base.

With this approach the base is formed from four flat sections that are bolted together. Modular Bases tend to be used where there are shipping or storage constraints. Being flat panels they ship and store much more compactly than Box Pads. (Shown on page 2)

Manufacturer: Concast Inc., of Zumbrota, Minnesota, USA.

Concast Inc., of Zumbrota, Minnesota, USA, has been producing concrete products for the electricity distribution industry for over 20 years.
Most of their products are manufactured in GFRC. They include trench systems, box pads, modular bases, and flat pads.
Concast uses hand-spray-up for, trench channels and box pads, and uses premix vibration casting for trench covers, modular bases, and flat pads.

Box Pads

The GFRC Box Pads that Concast manufactures are used to support electrical transformers and switch gear boxes. The light weight and manhandleability of the GFRC box pads offers significant installation cost savings over site-cast concrete and pre-cast units.
The box pads will support an ultimate load of 32,00 lb. [1,450 kg] before failure.

Cable Trenching Systems

The trench system has three basic components; channel sections, trench covers, and end plates. The channel sections have male/female interlocking ends which facilitates installation and eliminates the need for special tools, nuts, and bolts. Also the system includes a universal channel member that will form tees, ells, and crosses.
The channel sections weigh typically less than 90 lb. [41 kg] which means that they can be installed without using hoisting equipment. This is a significant cost advantage over pre-cast concrete. The light weight allows many units per truck load thereby saving on shipping costs compared to pre-cast.
The sidewalls of the trench channels are designed to carry 340 pounds per square foot (psf) [1,660 kg/m^2] without failure. Full scale load tests have shown that the trench sidewalls will carry over 800 psf [3,910 kg/m^2] without any visible cracking.
The standard trench covers for pedestrian traffic, which are nominally 2 inches [51mm] thick, are designed for a live load of 200 psf [977 kg/m^2]. Tests show that the covers will carry up to 338 psf [1,650 kg/m^2] before first cracks appear.

Flat Pads

Where equipment, such as transformers, switch gear boxes, or air conditioning units, only need to be surface mounted, without the need for a chamber underneath the equipment, Flat Pads are used.
The Flat Pads, which have a typical nominal thickness of about 4 inches [102 mm], have a waffle bottom design. This reduces weight and makes them easy to handle and permits loose earth to fill the bottom voids which level and stabilize the pad.

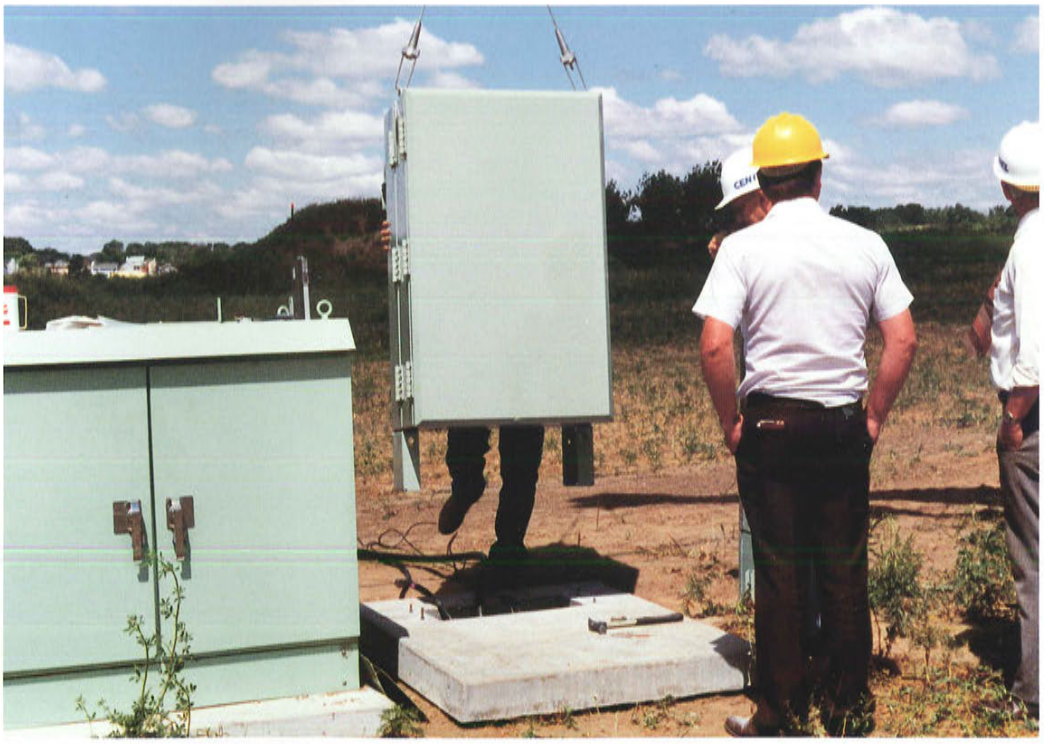

Nippon Electric Glass Co.,Ltd.
1-14, Miyahara 4-chome, Yodogawa-ku, Osaka 532-0003, Japan

2C JUN'99 Printed in Japan